UM358A

Bench

Vermut

By Estudio Fàbric © ® BENITO

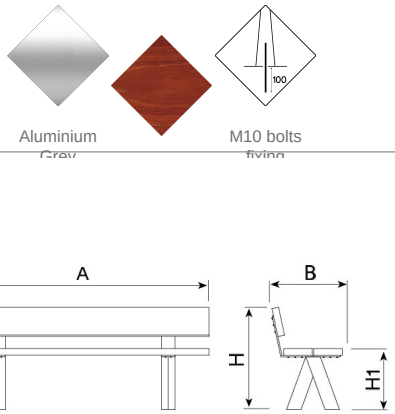

Aluminium Grey

M10 bolts fixing

ISO 9001 | ISO 50001 | ISO 14001 | ISO 45001

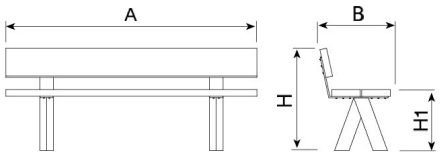

imensions (length x height x depth): 2000 x 885 x 620 mm. This outdoor
nced pro
crafted fr
natural grain and adds warmth to the overall design. Th
an alumi
ing structural stability, weather resistance, and low ma
pansion bolts, depending on the surface and project re

Ref.	A	B	H	H1
UM358A	2000	620	885	450
UM358SA	780	620	885	450

Vermut
UM358SA

+49 (0) 521 450 131-2 | mb@bas-mobiliar.de