BAS-MOBILIAR

HRM

T2056FRH

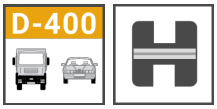

T2056FRH

Concrete framed cover

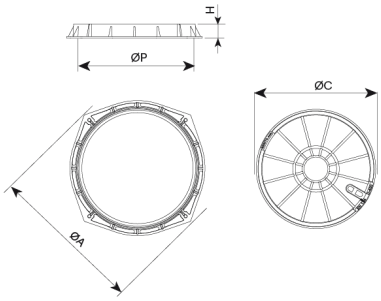

REF.		ØA	H	ØC	ØP	UN.
T2056FR	D400	810	75	645	600	10
T2056FRH	D400	810	75	645	600	10

HRM D4 is designed to support soft traffic. It is perfect for installing on roads with an ADT of 500 a 1.000, particularly road carriageways (including pedestrian streets), stabilised hard shoulders and parking areas for all manner of vehicles.

- Made from spheroidal graphite ductile cast iron, according to ISO 1083 (Type 500-7) and standard EN 1563.
- Compliant with the European standard UNE EN-124.
- Frame fitted with holes for fastening to the ground.
- Sound-proof joint included.
- Coated with non-toxic, non-flammable and non-polluting water-soluble black paint.

V. 2024-11-13 | The constant improvement and evolution of our products may result in some modifications of the technical specifications and characteristics of the products without prior notice.

+49 (0) 521 450 131-2 | mb@bas-mobiliar.de