BAS-MOBILIAR

Carousel
Cosmic

JC06B

3+

Certified EN1176 product

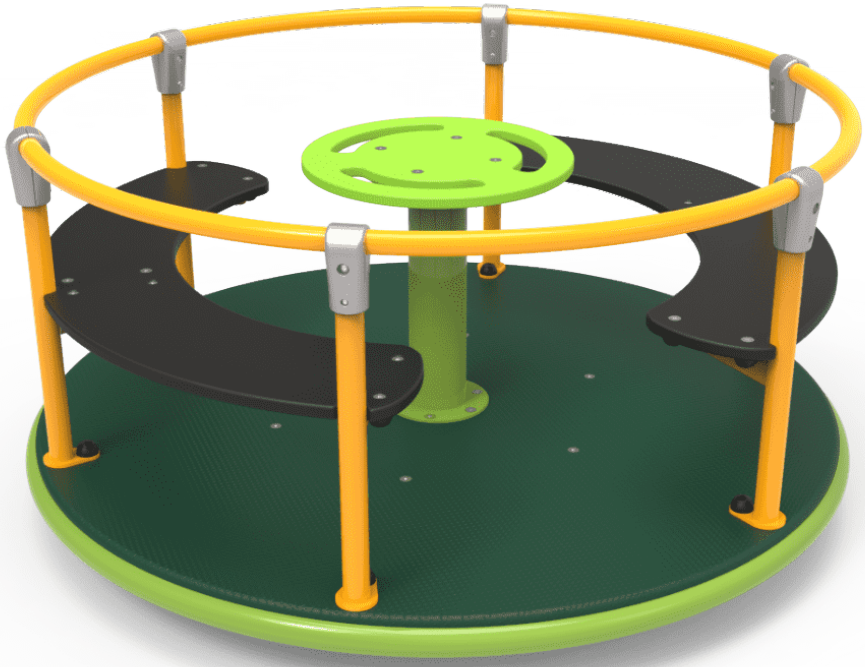

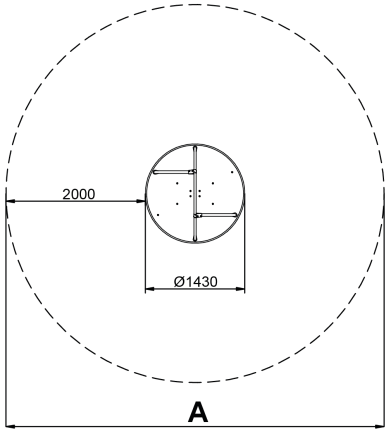

Structure, Metal: galvanised and powder-coated steel resistant to corrosion. Colours: RAL6018, RAL1028

A x B			
A=Ø5430mm	23.15m2	1m	4

SB

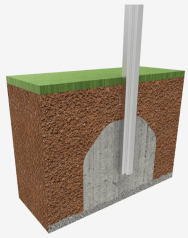

V. 2026-02-12 | The constant improvement and evolution of our products may result in some modifications of the technical specifications and characteristics of the products without prior notice.

+49 (0) 521 450 131-2 | mb@bas-mobiliar.de

Materials:

Platforms, Phenolic: birch plywood coated with a phenol film on both sides. Wire mesh anti-slip surface. Waterproof lateral protection.

Panels, HDPE: high-density polyethylene characterised by its resistance to chemical abrasives. As a polymer, it is unaffected by corrosion. Due to its light elastic nature, it offers high resistance to impact, making it very difficult to break.

Fixings: electro galvanised and stainless steel quality 8.8 DIN267, AISI-304.

- None of the materials requires a specific treatment for its disposal.
- If the product is subject to severe use, maintenance should be increased.
- Don't use the product before the installation/maintenance is ready.
- Please check the maintenance instructions.

Biggest part (mm): 1430x1430x65 / Heaviest part (kg): 63

IMPACT ZONE: security area and ground coverings according to the EN1176-1:2017 standard.

Spare parts availability: 10 years.

Ground anchoring screws not included.

Playful features:

Alternatives:

JC05

V. 2026-02-12 | The constant improvement and evolution of our products may result in some modifications of the technical specifications and characteristics of the products without prior notice.

V. 2026-02-12 | The constant improvement and evolution of our products may result in some modifications of the technical specifications and characteristics of the products without prior notice.